CITY OF FERGUSON
OFFICE OF THE CHIEF OF POLICE

Index as:
Organizational Chart

109.00 ORGANIZATIONAL CHART: The Department organizational chart will be updated annually or at such time as the organizational structure changes. This Organizational Chart will take effect in January/ 2014.

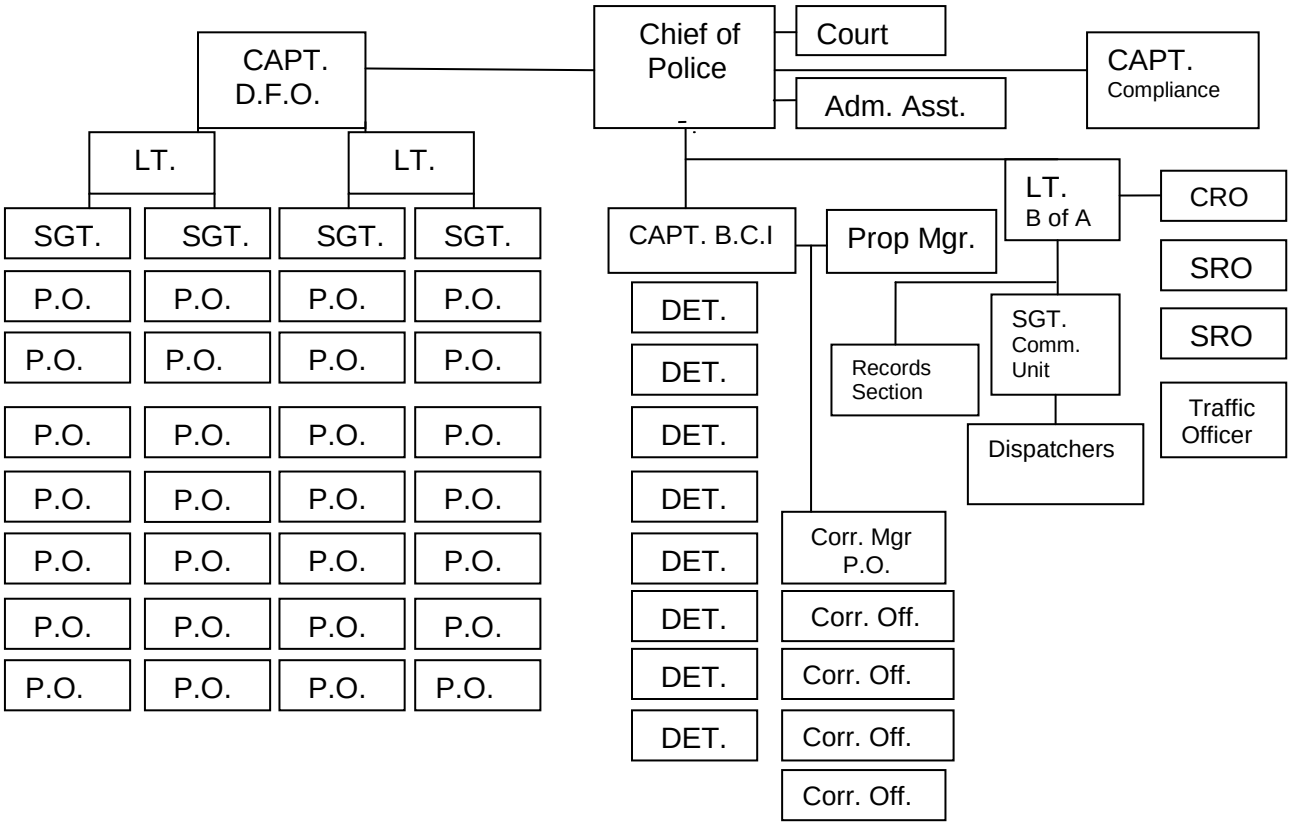

By order of:

Colonel Thomas Jackson

Distribution: All Department Personnel
MPCCF Reference 5.1

COLONEL THOMAS JACKSON
Chief of Police